TrynEx International, LLC, 531 Ajax Drive, Madison Heights, MI 48071-2429 • www.snowexproducts.com

October 15, 2026
Lit. No. 74911, Rev. 09

SnowEx®

Automatixx®
ATTACHMENT SYSTEM

7'6" RDV™ Snowplow

Mild Steel Blade 77790
Stainless Steel Blade 77795
Big Box Assembly 77890-3

Parts List

AUTHENTIC SnowEx® PARTS & ACCESSORIES

A DIVISION OF DOUGLAS DYNAMICS, LLC

TABLE OF CONTENTS

RDV™ BLADE COMPONENTS 4
77790 Mild Steel Blade 4
77795 Stainless Steel Blade 6
RDV T-FRAME AND HEADGEAR 8
T-Frame Assembly 8
Headgear Assembly 10
RDV HYDRAULIC AND ELECTRICAL COMPONENTS 12
Hydraulic Unit 12
Lift and Angle Rams, Hoses, Fittings 14
Electrical Components 15
Vehicle-Side Wiring Diagram – 3-Port, 2-Plug System 16
HEADLAMP KITS 17
Halogen 17
LED 18

Blade Components – Mild Steel

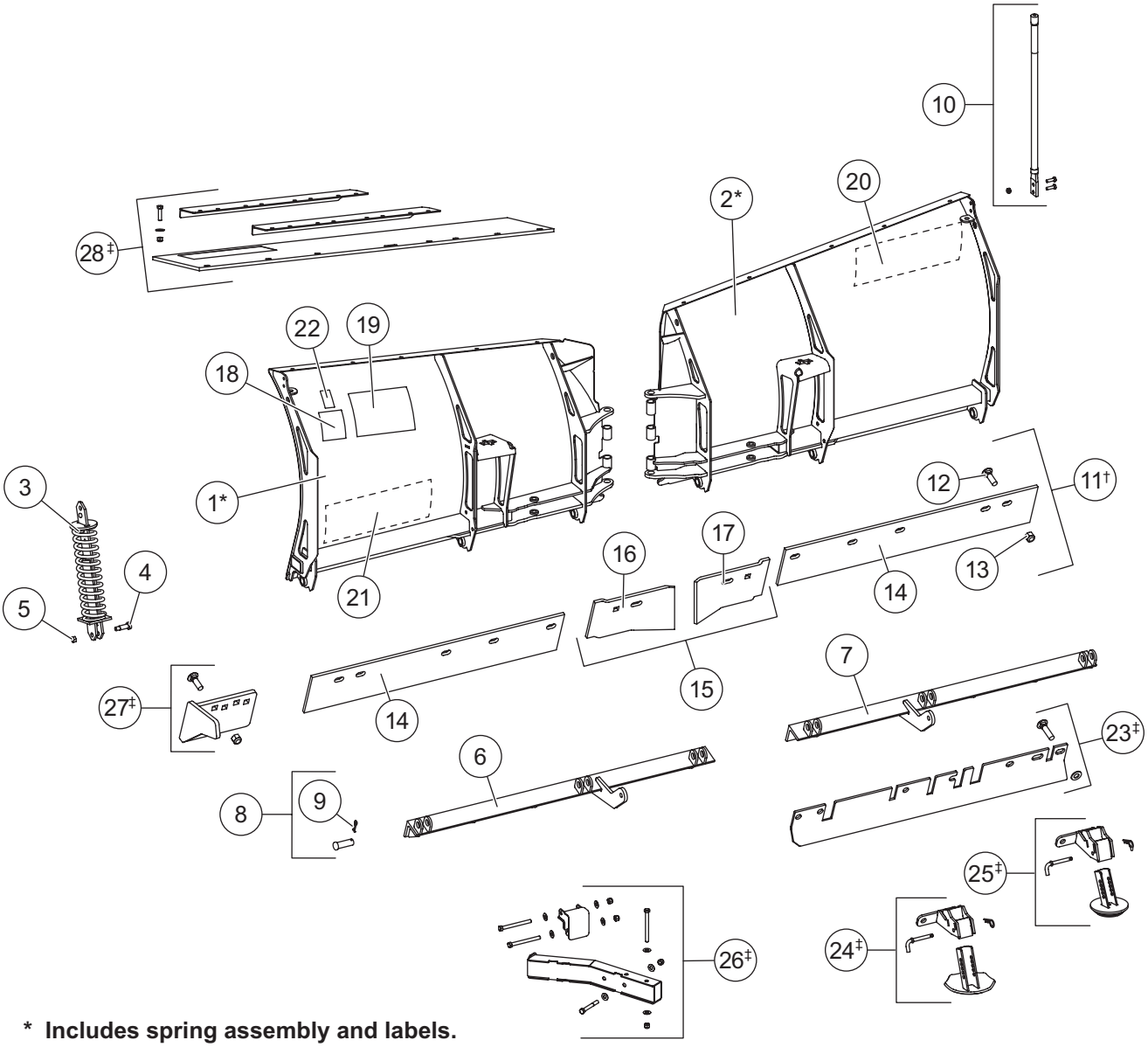

***** **Includes spring assembly and labels.**
† **Includes center cutting edges.**
‡ **Available as an accessory only.**

77790 RDV Blade Components							
Item	**Part**	**Qty**	**Description**	**Item**	**Part**	**Qty**	**Description**
1	79726	1	Wing Assembly – DS*	ns	79960‡	1	1/2 Cutting Edge Kit†
2	79727	1	Wing Assembly – PS*	ns	85127‡	2	1/2 Cutting Edge – One Side
3	21452	2	Removable Spring Assembly	ns	44894-1‡	1	1/2 Center Cutting Edge Kit
4		2	7/16-14 x 1/2 x 1-5/8 Shoulder Bolt	ns	79370‡	1	1/2 Center Cutting Edge – DS
5		2	7/16-14 Hex Locknut GB	ns	79371‡	1	1/2 Center Cutting Edge – PS
6	79731	1	Base Angle – DS	ns	44763	2	Bolt Bag – 3/8 & 1/2 Cutting Edges (1 side, 5 sets of fasteners)
7	79732	1	Base Angle – PS				
8	85082	6	1 x 2-3/4 Clevis Pin w/Cotter	ns	86867‡	1	5/8 Poly Cutting Edge Kit
9		6	1/4 x 1-1/2 Cotter Pin	ns	90413‡	1	Cutting Edge, Poly – DS
10	84525	1	Poly Blade Guide Kit, 24" (set of 2)	ns	90438‡	1	Cutting Edge, Poly – PS
11	79959	1	3/8 Cutting Edge Kit – Complete†	18	59900	1	Label – Warning/Caution, Snowplows
12		14	5/8-11 x 2 Carriage Bolt G5	19	52203	1	Label – Attach/Detach, Automatixx®
13		14	5/8-11 Hex Locknut GB	20	85113	1	Label – Logo, SnowEx® MS
14	85126	2	3/8 Cutting Edge – One Side	21	72956	1	Label – Logo, RDV MS
15	79977	1	3/8 Center Cutting Edge Kit	22	29256	1	Label – Warning, Foot Crush Hazard
16	79972	1	3/8 Center Cutting Edge – DS	ns	78751	1	Blade Label Kit, Complete – MS
17	79973	1	3/8 Center Cutting Edge – PS				
RDV Blade Accessories							
23‡	44281-4	1	Back Drag Edge Kit	27‡	43885	1	Curb Guard Kit – DS & PS
24‡	74519	1	Shoe Kit (set of 2)	28‡	79993	1	Rubber Deflector Kit (universal) 10"
25‡	83852	1	Extreme Wear Shoe Kit (set of 2)	ns	84477‡	1	Poly Blade Guide Kit, 36" (set of 2)
26‡	74528	1	Blade Stop Kit (set of 2)				
ns = not shown			MS = Mild Steel				G = Grade

* Includes spring assembly and labels.
† Includes center cutting edges.
‡ Available as an accessory only.

Blade Components – Stainless Steel

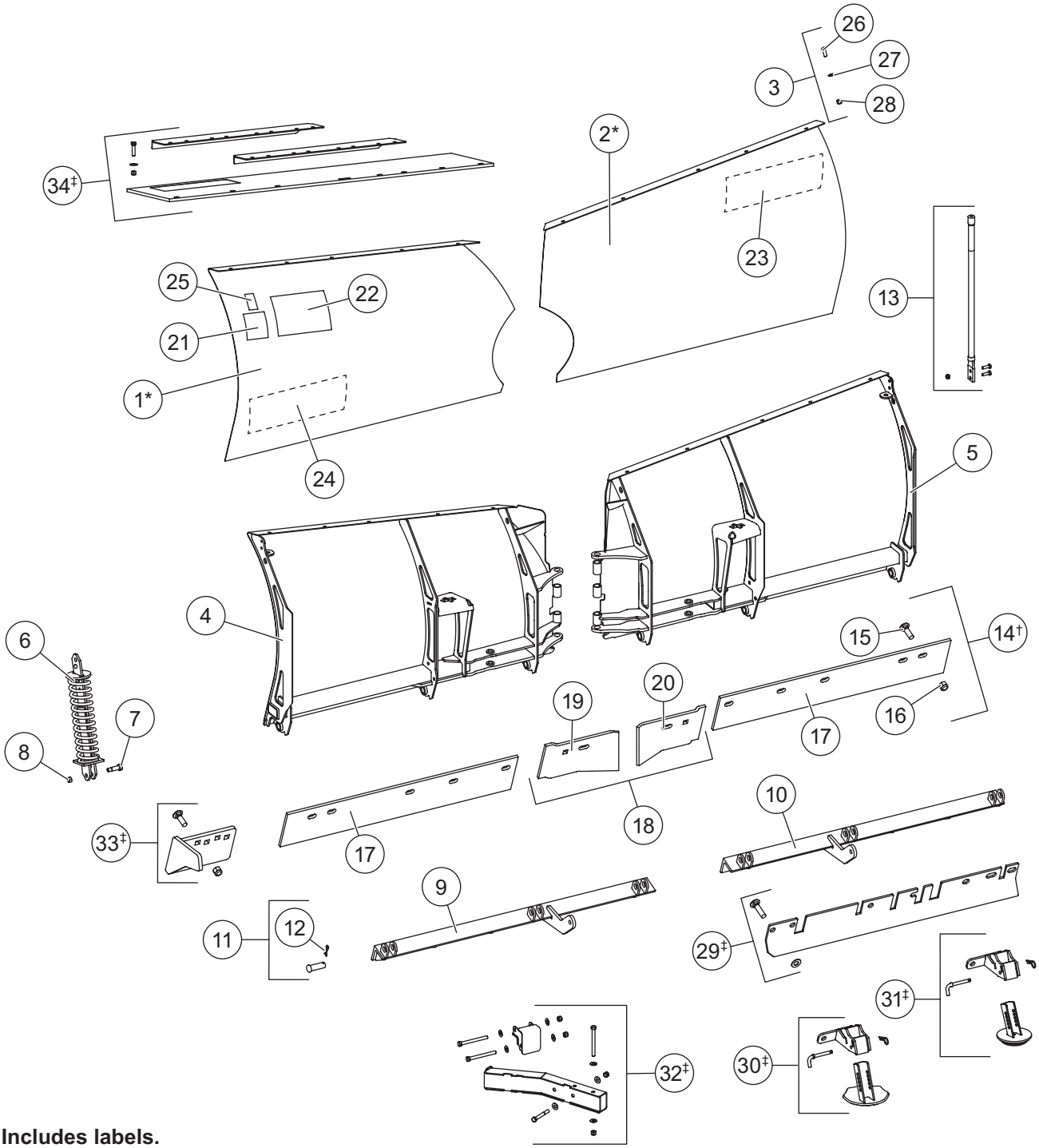

*** Includes labels.**
† Includes center cutting edges.
‡ Available as an accessory only.

77795 RDV Blade Components							
Item	**Part**	**Qty**	**Description**	**Item**	**Part**	**Qty**	**Description**
1	79718	1	Moldboard Kit w/Fasteners – DS*	19	79972	1	3/8 Center Cutting Edge – DS
2	79719	1	Moldboard Kit w/Fasteners – PS*	20	79973	1	3/8 Center Cutting Edge – PS
3	43289	1	Moldboard Fasteners Kit	ns	79960‡	1	1/2 Cutting Edge Kit†
4	79755	1	Frame, Base Angle, Spring Assy – DS	ns	85127‡	2	1/2 Cutting Edge – One Side
5	79756	1	Frame, Base Angle, Spring Assy – PS	ns	44894-1‡	1	1/2 Center Cutting Edge Kit
6	21452	2	Removable Spring Assembly	ns	79370‡	1	1/2 Center Cutting Edge – DS
7		2	7/16-14 x 1/2 x 1-5/8 Shoulder Bolt	ns	79371‡	1	1/2 Center Cutting Edge – PS
8		2	7/16-14 Hex Locknut GB	ns	44763	2	Bolt Bag – 3/8 & 1/2 Cutting Edges (1 side, 5 sets of fasteners)
9	79731	1	Base Angle – DS				
10	79732	1	Base Angle – PS	ns	86867‡	1	5/8 Poly Cutting Edge Kit
11		6	1 x 2-3/4 Clevis Pin w/Cotter	ns	90413‡	1	Cutting Edge, Poly – DS
12		6	1/4 x 1-1/2 Cotter Pin	ns	90438‡	1	Cutting Edge, Poly – PS
13	84525	1	Poly Blade Guide Kit, 24" (set of 2)	21	59900	1	Label – Warning/Caution, Snowplows
14	84850	1	3/8 Cutting Edge Kit – Complete†	22	52203	1	Label – Attach/Detach, Automatixx®
15		14	5/8-11 x 2 Carriage Bolt G5	23	85115	1	Label – Logo, SnowEx® SS
16		14	5/8-11 Hex Locknut GB	24	72959	1	Label – Logo, RDV SS
17	85126	2	3/8 Cutting Edge – One Side	25	29256	1	Label – Warning, Foot Crush Hazard
18	79977	1	3/8 Center Cutting Edge Kit	ns	78752	1	Blade Label Kit, Complete – SS
Item 3			**43289 Moldboard Fasteners Kit**				
26		10	3/8-16 x 1 Button Cap Screw SS	28		10	3/8-16 Hex Locknut Brass
27	29233	10	3/8 Hardened Washer				
RDV Blade Accessories							
29‡	44281-4	1	Back Drag Edge Kit	33‡	43885	1	Curb Guard Kit – DS & PS
30‡	74519	1	Shoe Kit (set of 2)	34‡	79993	1	Rubber Deflector Kit (universal) 10"
31‡	83852	1	Extreme Wear Shoe Kit (set of 2)	ns	84477‡	1	Poly Blade Guide Kit, 36" (set of 2)
32‡	74528	1	Blade Stop Kit (set of 2)				
ns = not shown			SS = Stainless Steel				G = Grade

* Includes labels.
† Includes center cutting edges.
‡ Available as an accessory only.

T-Frame, Snow Control, Stand, and Pins

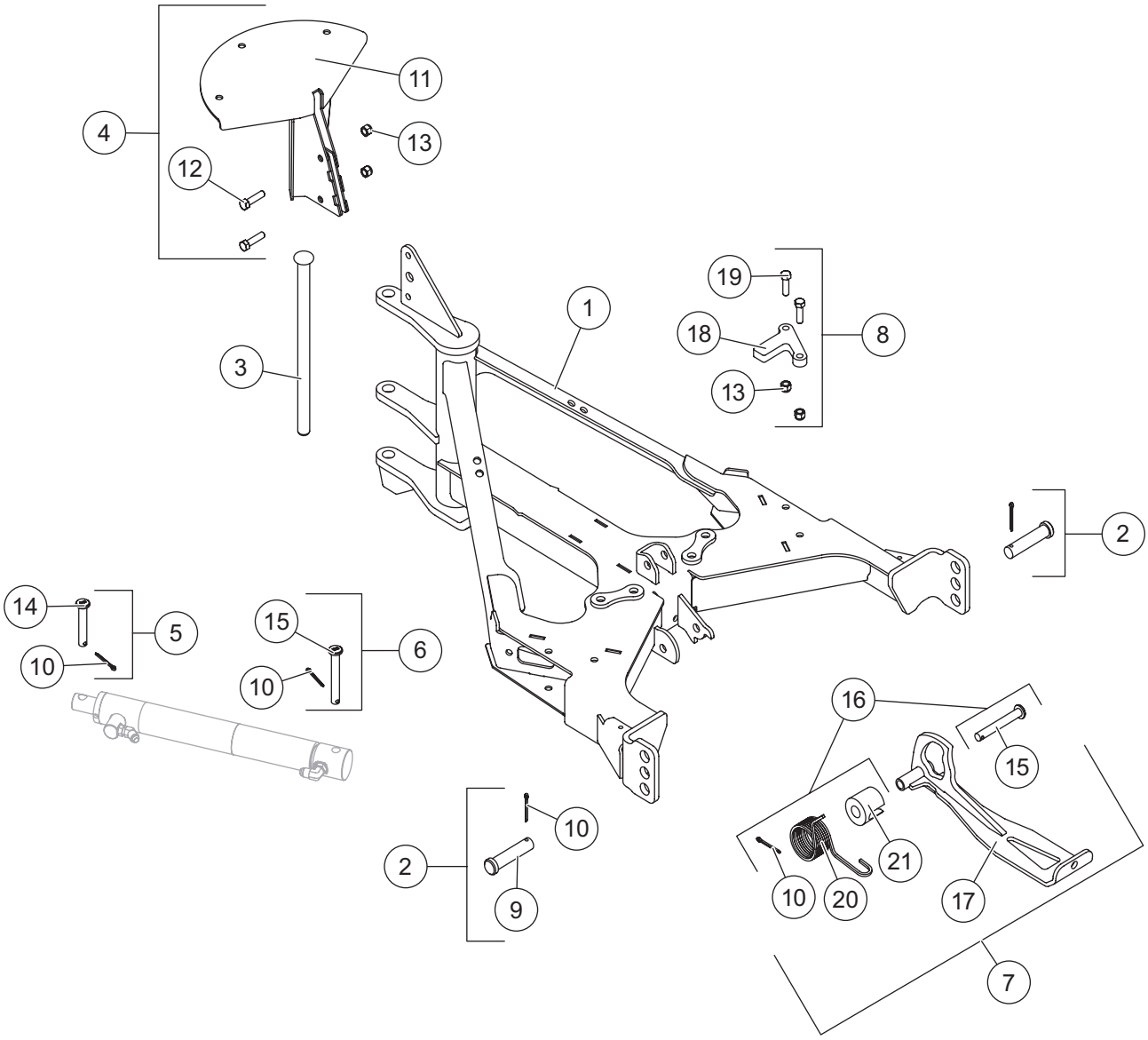

RDV™ T-FRAME ASSEMBLY

T-Frame Components							
Item	**Part**	**Qty**	**Description**	**Item**	**Part**	**Qty**	**Description**
1	79743	1	T-Frame, RDV	5	85198	2	1/2 x 2-7/8 Clevis Pin Kit
2	84618	2	3/4 x 3-1/4 Clevis Pin Kit	6	83629	2	1/2 x 3-11/16 Clevis Pin Kit
3	51702	1	Main Pivot Pin	7	79750	1	Stand Kit
4	79733	1	Snow Control Kit	8	79758	2	Stacking Stop Kit
Item 2			**84618 3/4 x 3-1/4 Clevis Pin Kit**				
9		1	3/4 x 3-1/4 Clevis Pin	10		1	5/32 x 1-1/2 Cotter Pin
Item 4			**79733 Snow Control Kit**				
11		1	Snow Control	13		2	3/8-16 Hex Locknut GB
12		2	3/8-16 x 2 Hex Cap Screw G5				
Item 5			**85198 1/2 x 2-7/8 Clevis Pin Kit**				
10		1	5/32 x 1-1/2 Cotter Pin	14		1	1/2 x 2-7/8 Clevis Pin
Item 6			**83629 1/2 x 3-11/16 Clevis Pin Kit**				
10		1	5/32 x 1-1/2 Cotter Pin	15		1	1/2 x 3-11/16 Clevis Pin
Item 7			**79750 Stand Kit**				
16		1	Stand Hardware Kit	17		1	Stand
Item 8			**79758 Stacking Stop Kit**				
13		2	3/8-16 Hex Locknut GB	19		2	3/8-16 x 1-1/4 Hex Cap Screw G5
18	79757	1	Stacking Stop RDV				
Item 16			**84615 Stand Hardware Kit**				
10		1	5/32 x 1-1/2 Cotter Pin	20		1	Stand Torsion Spring
15		1	1/2 x 3-11/16 Clevis Pin	21		1	Stand Spring Spacer
G = Grade							

Headgear and Receiver Components

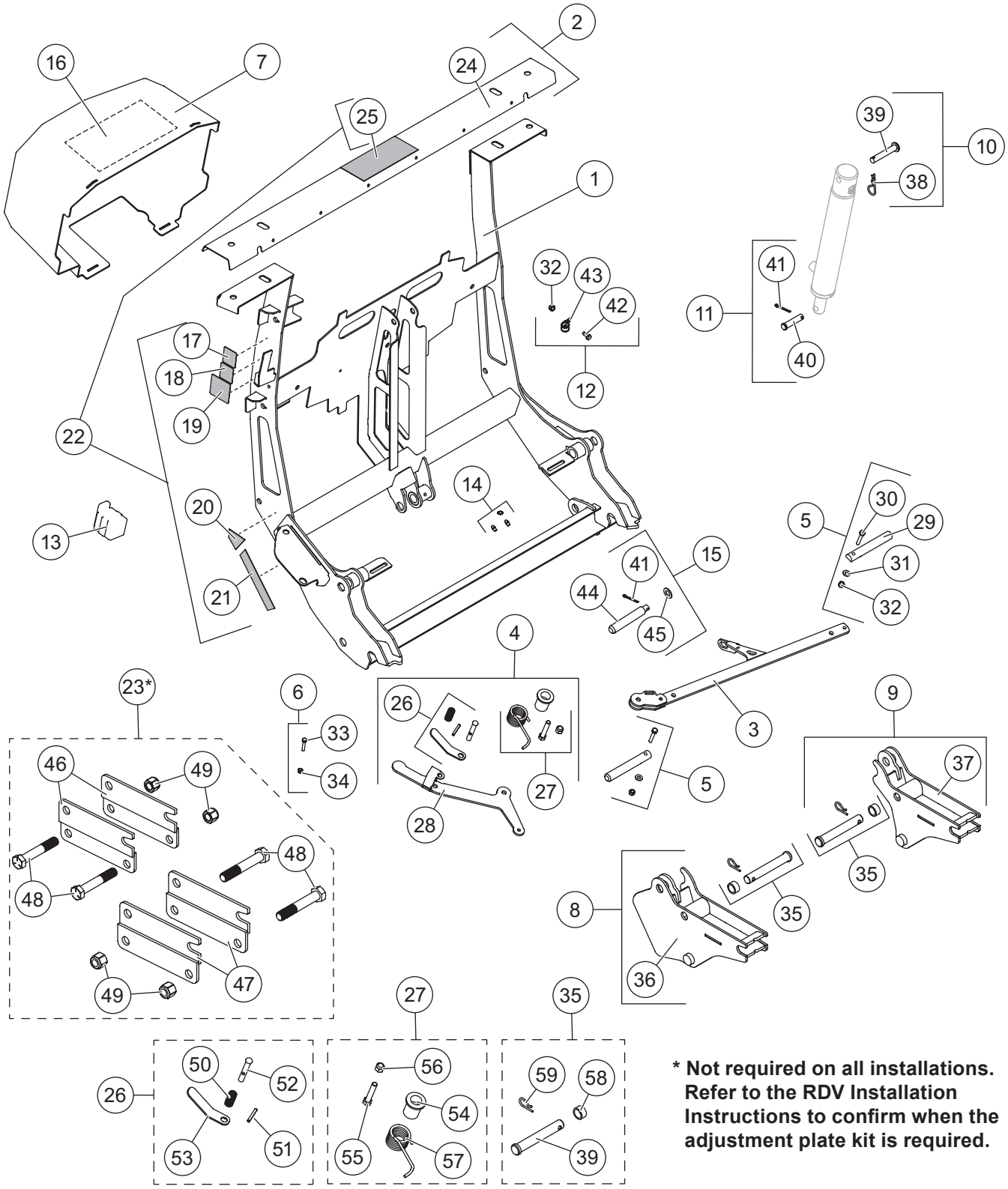

*** Not required on all installations. Refer to the RDV Installation Instructions to confirm when the adjustment plate kit is required.**

RDV™ HEADGEAR ASSEMBLY

Headgear Components							
Item	**Part**	**Qty**	**Description**	**Item**	**Part**	**Qty**	**Description**
1	79736	1	Headgear (incl. items 14, 17–21)	13	61246	1	Cable Boot
2	85009	1	Light Bar Channel	14	84616	1	Grease Zerk (pkg of 3)
3	79753	1	Link Arm – RDV	15	84601	1	Link Arm/Jack Stand Pin Kit
4	79752	1	Attach Handle Kit	16	74082	1	Label – Hydraulic Information, RDV
5	84603	2	Attach Pin Kit	17	52206	1	Label – Power Switch, Automatixx®
6	84635	1	Link Arm/Attach Handle Fastener Kit	18	52207	1	Label – Operation Switch, Automatixx
7	79759	1	Hydraulic Cover (incl. item 16)	19	69689	1	Label – Logo, SECURITY GUARD™
8	84606	1	Receiver Kit – DS	20	77717	1	Label – Upper, Automatixx
9	84607	1	Receiver Kit – PS	21	77719	1	Label – Lower, Automatixx
10	85123	1	3/4 x 5 Clevis Pin Kit	22	84647	1	Headgear Label Kit (items 17–21, 24)
11	85198	1	1/2 x 2-7/8 Clevis Pin Kit	23*	85395	1	Adjustment Plate Kit
12	84778	1	Power Cable Clamp Loop Kit				
Item 2			**85009 Light Bar Channel**				
24		1	Light Bar	25	84553	1	Label – Logo, SnowEx® Light Bar
Item 4			**79752 Attach Handle Kit**				
26	83633	1	Attach Handle Release Cam Kit	28	79754	1	Handle
27	83636	1	Torsion Spring/Spacer Kit				
Item 5			**84603 Attach Pin Kit**				
29		1	Hitch Pin	31		1	1/4 Flat Washer
30		1	1/4-20 x 1-1/2 Hex Cap Screw SS	32		1	1/4-20 Hex Locknut GB
Item 6			**84635 Link Arm/Attach Handle Fastener Kit**				
33		1	5/16-18 x 1-1/4 Hex Cap Screw G5	34		1	5/16-18 Hex Locknut GB
Item 8			**84606 Receiver Kit – DS**				
35	84611	1	Receiver Pin Kit	36		1	Receiver – DS
Item 9			**84607 Receiver Kit – PS**				
35	84611	1	Receiver Pin Kit	37		1	Receiver – PS
Item 10			**85123 3/4 x 5 Clevis Pin Kit**				
38		1	1/8 Hairpin Cotter	39	95739	1	3/4 x 5 Clevis Pin HT
Item 11			**85198 1/2 x 2-7/8 Clevis Pin Kit**				
40		1	1/2 x 2-7/8 Clevis Pin	41		1	5/32 x 1-1/2 Cotter Pin
Item 12			**84778 Power Cable Clamp Loop Kit**				
32		1	1/4-20 Hex Locknut GB	43		1	#10 Clamp Loop
42		1	1/4-20 x 1 Hex Cap Screw G5				
Item 15			**84601 Link Arm/Jack Stand Pin Kit**				
41		1	5/32 x 1-1/2 Cotter Pin	45		1	1/2 Flat Washer Narrow SS
44		1	Stand Actuator Pin				
Item 23*			**85395 Attachment Plate Kit**				
46	85393	2	Height Adjustment Plate – DS	48		4	3/4-10 x 4-1/2 Cap Screw G5
47	85394	2	Height Adjustment Plate – PS	49		4	3/4-10 Hex Locknut GB
Item 26			**83633 Attach Handle Release Cam Kit**				
50		1	Compression Spring	52		1	Handle Lock Pin
51		1	3/16 x 1-3/8 Spring Pin SS	53		1	Handle Lock Pin Lever
Item 27			**83636 Torsion Spring/Spacer Kit**				
54		1	Handle Spring Spacer	56		1	3/8-16 Hex Locknut GB
55		1	3/8-16 x 2 Hex Cap Screw G5	57		1	Torsion Spring
Item 35			**84611 Receiver Pin Kit**				
39	95739	1	3/4 x 5 Clevis Pin HT	59	42142	1	R-Pin Cotter
58	63211	1	Spacer				
SS = Stainless Steel			HT = Heat Treated				G = Grade

* Not required for all installations. Refer to Installation Instructions to confirm when adjustment plate kit is required.

Hydraulic Unit

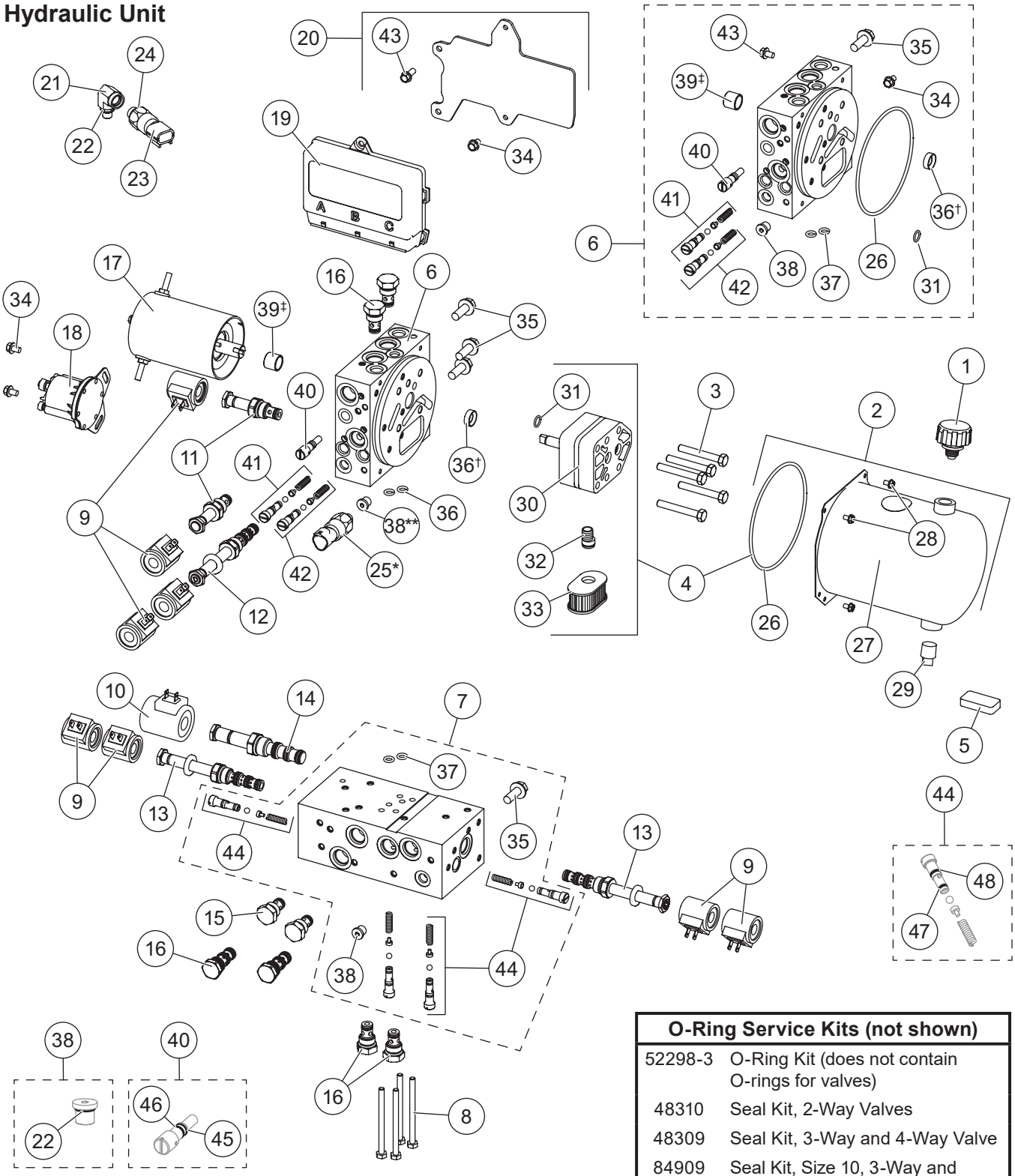

O-Ring Service Kits (not shown)	
52298-3	O-Ring Kit (does not contain O-rings for valves)
48310	Seal Kit, 2-Way Valves
48309	Seal Kit, 3-Way and 4-Way Valve
84909	Seal Kit, Size 10, 3-Way and 4-Way Valve

*** May not be present on units built before 7/1/2021.**

**** Not present if item 25 is installed.**

† Use 52252 tool for pump shaft seal replacement (includes 1 seal).

‡ Use 52251 tool for bearing sleeve replacement (includes 1 bearing).

77440 Hydraulic Unit RDV V-Plow (Also includes electrical components 4–7 from p. 15.)							
Item	**Part**	**Qty**	**Description**	**Item**	**Part**	**Qty**	**Description**
1	48278	1	Breather Pressure Control	14	84900	1	Valve, 4-Way SV10-43 w/Nut
2	52289	1	Reservoir Kit	15	77391	2	PO Check Valve
3		5	5/16-18 x 2-1/4 Hex Cap Screw G5	16	84934	6	Check Valve CV08-2059
4	52553	1	Pump Kit	17	52299	1	Motor Assembly 3"
5	73897	1	Magnet	18	52290	1	Motor Relay
6	77438	1	Primary Manifold, w/o Valves	19	52292-2	1	Plow Module
7	77439	1	Secondary Manifold, w/o Valves	20	52293-1	1	Module Plate w/Hardware
8		4	1/4-20 x 3-1/2 Hex Cap Screw G5	21	52295	1	Elbow, 90° –4 M ORB/–6 F ORB
9	52294	8	Coil w/Spade Terminals	22	44343	2	O-Ring -904
10	84901	1	Coil 10 w/Spacer	23	52296	1	Pressure Switch
11	84936	2	Valve, 2-Way NC w/Rev Flow	24	56569	1	O-Ring -906
12	84937	1	Valve, 4-Way 3-Pos. w/Nut & Spacer	25	83853	1	Pressure Switch (Scrape Maxx™ down-force feature)
13	52285	2	Valve, 4-Way 3-Position Closed Center w/Nut and Spacer				
Item 2			**52289 Reservoir Kit**				
26	66519	1	O-Ring 2-250	28		4	#10-24 x 5/16 Machine Screw
27		1	Reservoir	29	92079	1	Plug, Square 3/8 NPTF
Item 4			**52553 Pump Kit**				
26	66519	1	O-Ring 2-250	32	10887	1	Hydraulic Pump Inlet Fitting
30		1	Pump	33	48281	1	Suction Filter
31	56274	1	O-Ring -013				
Item 6			**77438 Primary Manifold w/o Valves**				
26	66519	1	O-Ring 2-250	38	44344	1	Plug, Hex Socket –4 M ORB
31	56274	1	O-Ring -013	39‡	56364	1	Sleeve Bearing
34		2	1/4-20 x 3/8 Hex Washer-Head Thread-Rolling Screw	40	48517	1	Quill
				41	52284	1	Relief Valve Repair Kit (1 set)
35		3	3/8-16 x 1 Serr. Flange Hex Cap Screw	42	52282	1	Relief Valve Kit (1 set)
36†	66515	1	Pump Shaft Seal	43		2	1/4-20 x 5/8 Hex Washer-Head Thread-Rolling Screw
37	43818	2	O-Ring -109				
Item 7			**77439 Secondary Manifold w/o Valves**				
35		3	3/8-16 x 1 Serr. Flange Hex Cap Screw	38	44344	1	Plug, Hex Socket –4 M ORB
37	43818	2	O-Ring -109	44	52283	2	Relief Valve Kit (2 sets)
Item 20			**52293-1 Module Plate w/Hardware**				
34		2	1/4-20 x 3/8 Hex Washer-Head Thread-Rolling Screw	43		4	1/4-20 x 5/8 Hex Washer-Head Thread-Rolling Screw
Item 38			**44344 Plug, Hex Socket –4 M ORB**				
22	44343	1	O-Ring -904				
Item 40			**48517 Quill**				
45	48239	1	O-Ring -106	46	48240	1	Back-Up Ring -106
Item 44			**52283 Relief Valve Kit (2 sets)**				
47	55371	2	O-Ring -008	48	25731	2	O-Ring -010
F = Female			M = Male				G = Grade

† Use 52252 tool for pump shaft seal replacement (includes 1 seal).

‡ Use 52251 tool for bearing sleeve replacement (includes 1 bearing).

Go to *www.snowexproducts.com* for hydraulic unit service information and specifications.

Lift and Angle Ram Components

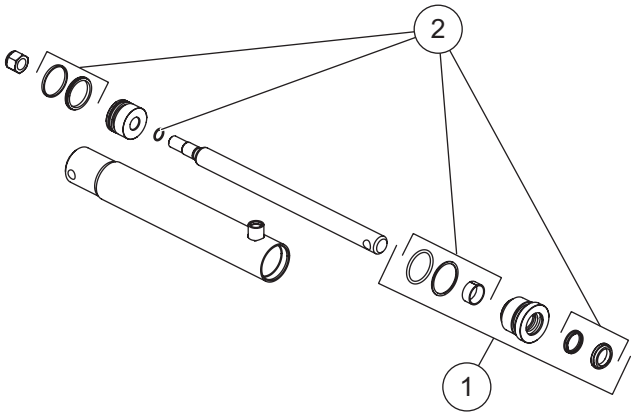

90935 Lift Ram Assembly 1-3/4 x 9 DA (Black) 77425* Lift Ram Assembly 1-3/4 x 9 DA (Red)			
Item	**Part**	**Qty**	**Description**
1	77434	1	Gland Assembly 1"
2	77435	1	Seal Kit 1-3/4 DA Ram

* Discontinued

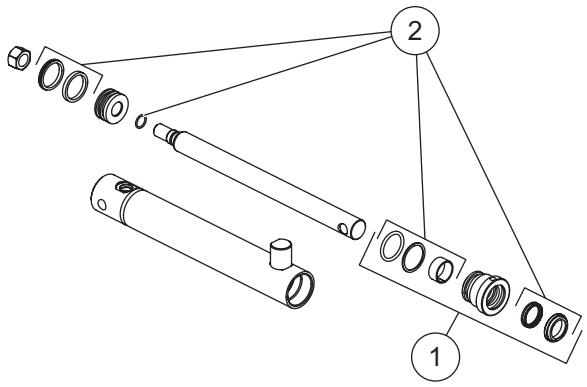

100258 Wing Ram Assembly 1-1/2 x 12 DA (Black) 77428* Wing Ram Assembly 1-1/2 x 12 DA (Red)			
Item	**Part**	**Qty**	**Description**
1	52558	1	Gland Assembly 1"
2	52557	1	Seal Kit 1-1/2 DA Ram

* Discontinued

Hoses and Fittings

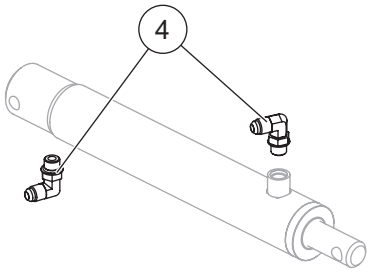

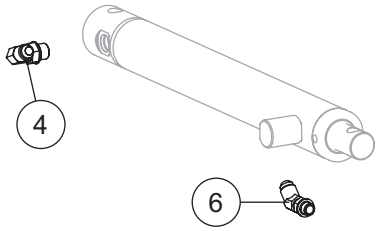

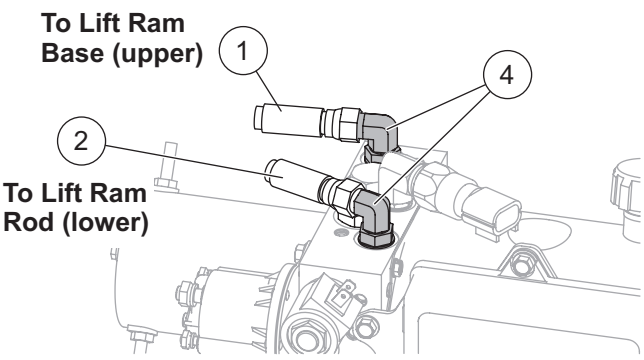

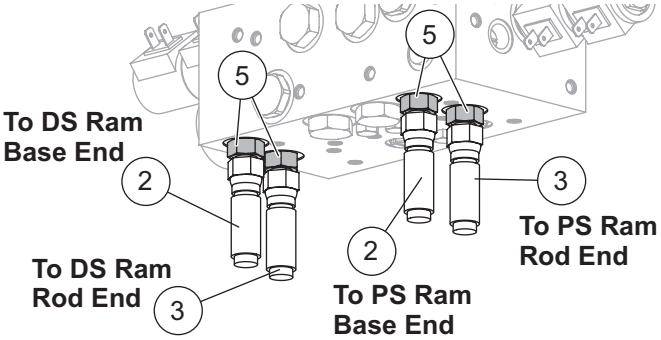

Hoses and Fittings							
Item	**Part**	**Qty**	**Description**	**Item**	**Part**	**Qty**	**Description**
1	84446	1	Hose, 1/4 x 14 w/F JIC Ends	5	B60007	4	Connector –6 M JIC/–6 M ORB
2	77436	3	Hose, 1/4 x 26 w/F JIC Ends	6	41093	2	Elbow, 45° –6 M JIC/–4 M ORB
3	77437	2	Hose, 1/4 x 30 w/F JIC Ends	ns	56823	2	Hose Wrap
4	56615-1	6	Elbow, 90° –6 M JIC/–6 M ORB				
ns = not shown			F = Female				M = Male

Electrical Components

Not drawn to scale.

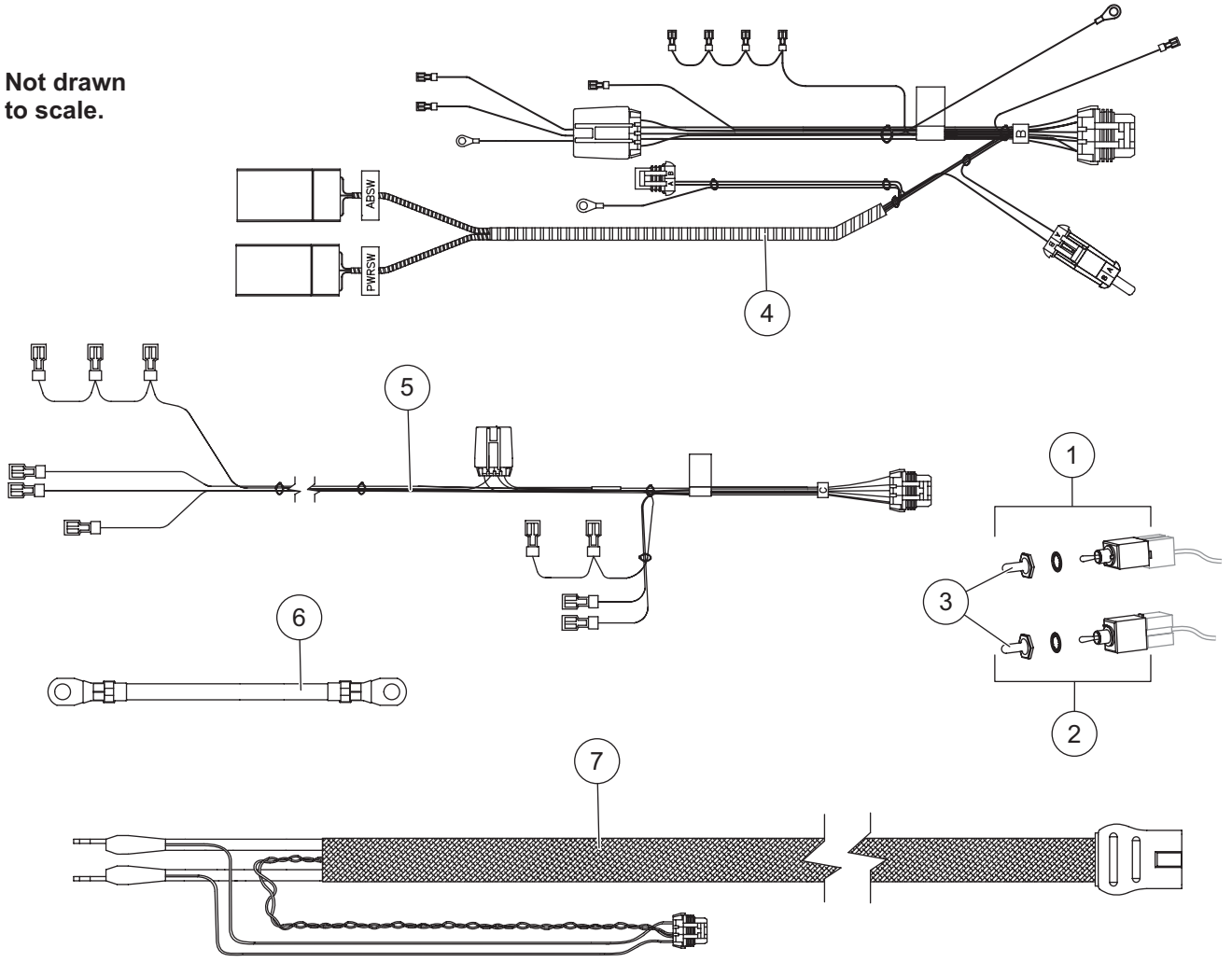

Plow-Side Electrical Components							
Item	**Part**	**Qty**	**Description**	**Item**	**Part**	**Qty**	**Description**
1	40575	1	Toggle Switch (MOM-ON, OFF, ON)	6	29071	1	Cable Assembly 8"
2	40576	1	Toggle Switch (MOM-ON, OFF, MOM-ON)	7	52291	1	Plow Battery Cable
				ns		2	Fuse, 5A Mini Automotive-Style (for item 4)
3	48259	2	Switch Boot				
4	70448	1	Harness Plow Control, 4-Coil	ns		2	Fuse, 4A Mini Automotive-Style (for item 5)
5	72038	1	Harness Plow Control, 5-Coil				
Vehicle-Side Electrical Components							
A*	72527	1	Vehicle Battery Cable	C*	90730	1	200A Fuse Kit
B*	28587	1	Vehicle Control Harness	ns	48325	2	Plug Cover
ns = not shown							

* For diagram see Vehicle-Side Harness Diagram on next page.

Vehicle-Side Harness Diagram
3-Port, 2-Plug System

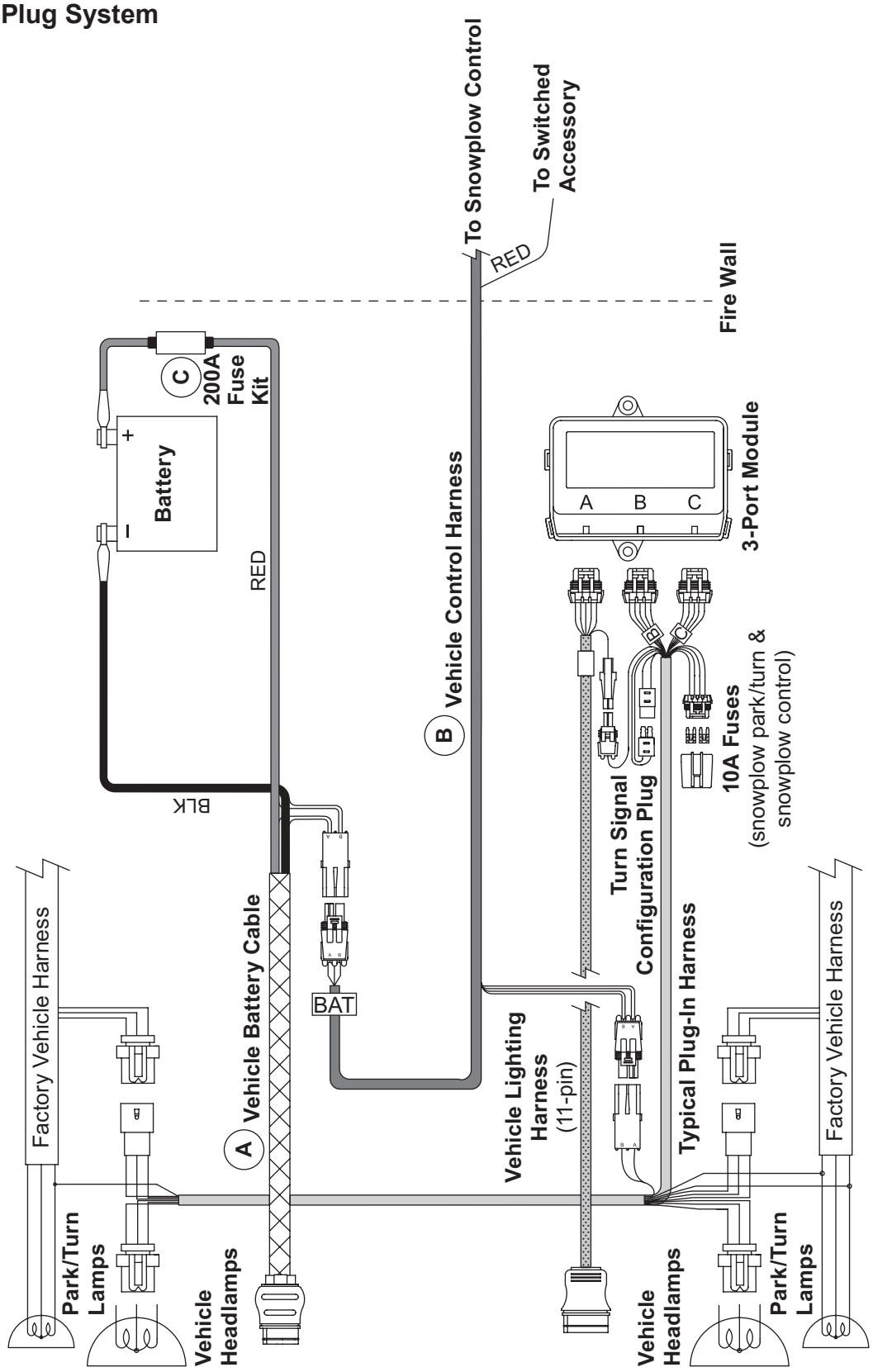

Headlamp Kit – Halogen

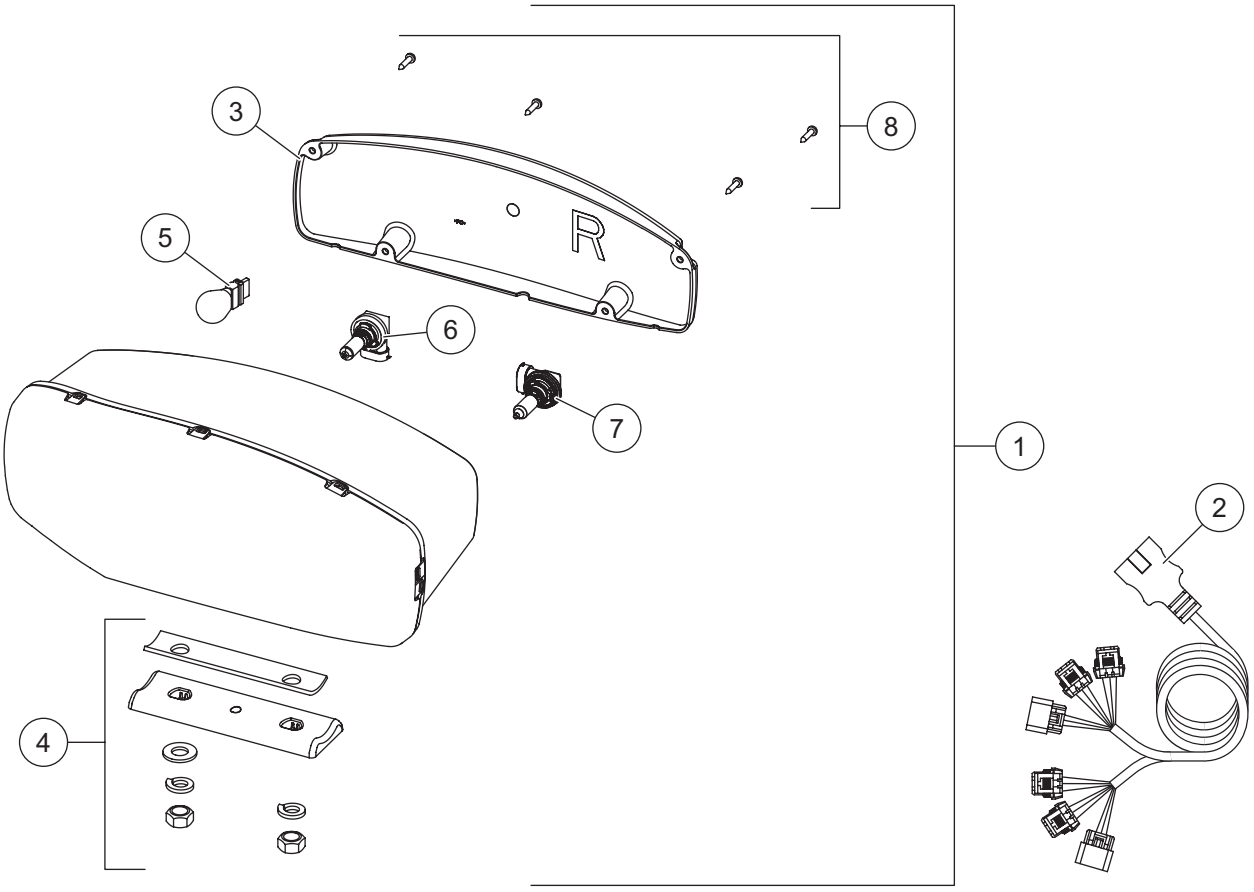

38800 Headlamp Kit H9/H11 (pair)							
Item	**Part**	**Qty**	**Description**	**Item**	**Part**	**Qty**	**Description**
1	38802	1	Headlamp Service Kit H9/H11 – PS	2	38807	1	Harness Service Kit H9/H11
ns	38801	1	Headlamp Service Kit H9/H11 – DS				
Item 1	**38801/38802 Headlamp Service Kit H9/H11 – PS/DS**						
3	38803	1	Rear Cover Kit H9/H11 – PS	6	38811	1	Headlamp Bulb Service Kit H11
ns	38812	1	Rear Cover Kit H9/H11 – DS	7	38809	1	Headlamp Bulb Service Kit H9
4	38804	1	Mounting Hardware Kit H9/H11	8	38808	1	Cover Screws Service Kit H9/H11 (pkg of 4)
5		1	Park/Turn Bulb (trade no. 4157NAK)				
ns = not shown							

Headlamp Kit – LED

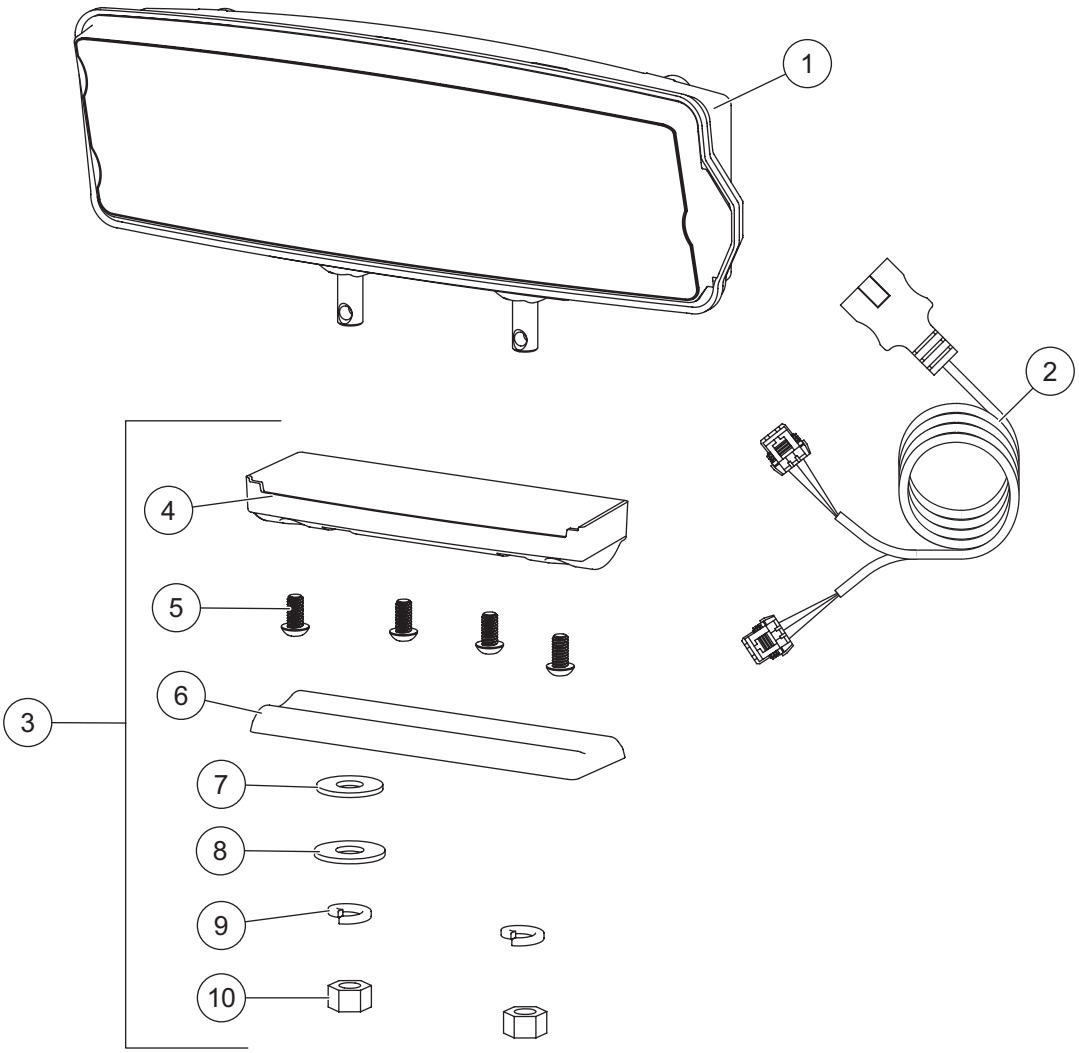

72525 Headlamp Kit LED							
Item	**Part**	**Qty**	**Description**	**Item**	**Part**	**Qty**	**Description**
1	39901	1	Headlamp Service Kit LED – DS	3	39903	1	Mounting Hardware Kit LED
ns	39902	1	Headlamp Service Kit LED – PS	ns	72512	1	LED Harness Connector Cover (pkg of 2)
2	72548	1	Harness Service Kit LED				
Item 3			**39903 Mounting Hardware Kit LED**				
4		1	Plastic Casing	8		1	1/2 Flat Washer
5		4	1/4 Button Cap Screw	9		2	1/2 Lock Washer
6		1	Headlamp Swivel	10		2	1/2 Hex Nut
7		1	1/2 Rubber Washer	ns		1	Metal Insert
ns = not shown							

TrynEx International, LLC
531 Ajax Drive
Madison Heights, MI 48071-2429
www.snowexproducts.com

A DIVISION OF DOUGLAS DYNAMICS, LLC

Copyright © 2026 Douglas Dynamics, LLC. All rights reserved. This material may not be used, reproduced, or copied in any manner, in whole or in part, in any printed, mechanical, electronic, film, or other distribution and storage media, nor analyzed or manipulated in any manner for the purpose of training artificial intelligence technologies or systems, without the written consent of TrynEx International, LLC. In accordance with Article 4(3) of the Digital Single Market Directive 2019/790, TrynEx International expressly reserves this work from the text and data mining exception. Authorization to photocopy items for internal or personal use by TrynEx International outlets or equipment owner is granted.

TrynEx International reserves the right under its product improvement policy to change construction or design details and furnish equipment when so altered without reference to illustrations or specifications used. TrynEx International or the vehicle manufacturer may require or recommend optional equipment for snow removal. Do not exceed vehicle ratings with a snowplow. TrynEx International offers a limited warranty for all equipment and accessories. See separately printed page for this important information. The following are registered (®) or unregistered (™) trademarks of Douglas Dynamics, LLC: Automatixx®, RDV™, Scrape Maxx™, SECURITY GUARD™, SnowEx®.

Printed in U.S.A.

Lit. No. 74911, Rev. 09 October 15, 2026